UNITED STATES DEPARTMENT OF AGRICULTURE
Agricultural Marketing Service
Fruit and Vegetable Division
Processed Products Branch

FILE CODE
147-A-2

July 1994

Supersedes File Code Dated March 1988
and Branch Notice No. 2574

SUBJECT: **Inspection of 50 Percent Juice Drinks and Juice Drink Products Under the Child Nutrition Labeling Program**

TO: All Inspectors

I. GENERAL

Purchasing agents for school districts throughout the country have been authorized by the Food and Nutrition Service (FNS) to purchase various 50 percent juice drinks and juice drink products, such as sherbet, yogurt, and beverage base for use in their school lunch feeding programs. The purchases will require in-plant inspection to determine compliance with FNS child nutrition (CN) meal pattern 50 percent juice program.

Prior to in-plant inspection of these products, the manufacturer is required to submit all labels along with the applicable formulation to FNS for initial approval. These approvals will then be transmitted to our Branch. File Code 147-0-30 is an FNS publication that contains instructions for manufacturers on how to apply for and obtain approval of a label with a CN statement.

II. PROCESSED PRODUCTS BRANCH RESPONSIBILITIES

The in-plant inspector(s) will be responsible for the following:

1. The inspection of incoming product materials for wholesomeness before their use;

2. Checking and verifying ingredients and product formulations for compliance with label statements; and

3. Checking the quality and non-quality factors of the finished products according to established procedures.

The contents of this guidance document do not have the force and effect of law and are not meant to bind the public in any way. This document is intended only to provide clarity to the public regarding existing requirements under the law or agency policies.

III. WHOLESOMENESS OF PRODUCT MATERIALS

All product materials require wholesomeness inspections and must be analyzed using the methods indicated in File Code 172-A-1, Inspection Procedures for Foreign Material. All other components not covered by a Defect Action Level require visual and/or sensory examination to verify that the ingredient is in good condition. These analyses and/or examinations are to be accomplished prior to the use of these materials in the finished product. The sampling rate for wholesomeness and product condition inspections shall be in accordance with Table II of File Code 172-A-1 for lot inspection.

The methods of analysis for light filth, heavy filth and mold determinations are covered in File Codes 172-A-1, and 135-A-8, Mold Count. These procedures apply only to components not previously inspected. Plant management is responsible for providing a copy of a certificate or score sheet that cover components from previously inspected lots. Product condition will be verified on these lots at time of use.

IV. VERIFICATION OF PRODUCT FORMULATION

CN labeled products require in-plant inspection to verify that the product produced meets the declared ounces of creditable single strength juice shown in the CN logo statement. The information needed to determine compliance with the 50 percent juice program is as follows:

A. <u>FDA's recognized minimum single strength Brix value of the specific juice being used</u>.

The Food and Drug Administration has established single strength Brix values as part of their Nutritional Labeling and Education Act regulations. The Brix values shown in Attachment I shall be used to determine compliance with FNS child nutrition 50 percent juice program. This value is used to determine the "fold" of natural concentrate and the number of gallons of natural juice available.

B. <u>The Brix value of the concentrated juice(s) used in making the product (concentrated juice drink)</u>.

This is the Brix value of the fruit juice concentrate with no sugar or any other additives.

C. The pounds of concentrated juice(s) used in making the product.

The number of pounds and Brix of the concentrate are used to calculate the number of gallons of concentrate. Most formulators measure by weight. This is the accepted procedure. Measuring ingredients by volume is much less precise and the volume error could cause an extremely wide variation in final natural juice content.

D. The total gallons of concentrated drink base made from the above natural juice concentrate.

This is the size of the batch mixed. It includes all of the ingredients used in making the final product. This figure could be provided by the applicant and verified by converting the number of cases produced to gallons from that batch.

E. The label statement.

This statement will give you the mixing directions for the product, amount of creditable juice, and other vital information.

V. PROCEDURE TO DETERMINE THE OUNCES OF CREDITABLE JUICE

File Code 135-A-50, Sucrose Conversion Table, contains information that pertains to the pounds solids/gallon and the weight/gallon in air at 20° C.

The five steps to determine if the ounces of single strength creditable juice declared is accurate are as follows:

Step 1. Convert the pounds of juice concentrate to gallons by dividing the pounds of concentrate in the formula by the weight/gallon in air at 20° C.

pounds of juice concentrate ÷ weight/gallon in air at 20° C. = gallons of juice concentrate

Step 2. Determine the product fold by dividing pounds solids/gallon (corresponding to the Brix value of the concentrate) by pounds solids/gallon (corresponding to the Brix value of single strength).

pounds solids/gallon (concentrate) ÷ pounds solids/gallon (single strength) = fold

Step 3. Determine the gallons of reconstituted juice by multiplying the gallons of juice concentrate by the fold.

gallons of juice concentrate × fold = gallons reconstituted single strength juice

Step 4. Determine the percent of creditable juice by dividing the gallons of reconstituted juice by the total gallons of juice drink.

gallons reconstituted juice ÷ total gallons juice drink = percent creditable juice

Step 5. Determine the ounces of creditable juice in one serving of the product by multiplying the serving size by the percent creditable juice.

serving size × percent creditable juice = ounces of creditable juice/serving

VI. EXAMPLES OF PRODUCT FORMULATION SHEETS AND COMPUTATIONS

A. Example No. 1 - Grape Juice Drink Base

Product Formulation Sheet:

FORMULATION INGREDIENTS	POUNDS OF INGREDIENTS IN BATCH SIZE FORMULA
Grape Concentrate (68° Brix)	5218.0
High Fructose Corn Syrup	3966.0
Citric Acid	28.9
Ascorbic Acid	20.4
Water	1241.0
BASE TOTAL	10474.3

Standard for single strength juice is 16.0° Brix, 1.419 lbs. solids per gallon
Batch size: 5000 gallons reconstituted

Calculations:

1. 5218.0 ÷ 11.130 = 468.823

2. 7.568 ÷ 1.419 = 5.333

3. 468.823 × 5.333 = 2500.233

4. 2500.233 ÷ 5000 = .50004

5. 4 oz. serving × .50004 = <u>2.0001</u> oz.

   Meets label declaration of 1/4 cup (2 fluid ounces) of single strength juice.

B. Example No. 2 - Frozen Orange Juice Drink Bar

Product Formulation Sheet:

FORMULATION INGREDIENTS	POUNDS OF INGREDIENTS IN BATCH SIZE FORMULA
Water	72.4
Orange Juice Concentrate (58° Brix)	15.3
Sugar	9.6
Corn Syrup Solids	1.9
Guar Gum	.2
Citric Acid	.1
Natural Orange Flavor	.5
TOTAL	100.0

Standard for single strength juice is 11.8° Brix, 1.029 lbs. solids per gallon

Bath size: 11.5 galions

Calculations:

1. $\frac{15.3}{10.630} = 1.439$

2. $\frac{6.125}{1.029} = 5.991$

3. $1.439 \times 5.991 = 8.621$

4. $\frac{8.621}{11.5} = .749$

5. 3 oz. serving × .749 = <u>2.247</u> oz.

   Meets label declaration of 1/4 cup (2 fluid ounces) of single strength juice.

C. Example No. 3 - Orange Naturally Flavored Dessert. (formula includes 29% overrun)

FORMULATION INGREDIENTS	POUNDS OF INGREDIENTS IN BATCH SIZE FORMULA
Water	4,160.529
Orange Juice Concentrate (71° Brix)	898.158
High Fructose Corn Syrup	631.900
Natural Orange Flavor	20.004
Citric Acid	15.000
Ascorbic Acid	5.400
Guar Gum	5.000
TOTAL	5,735.991

Batch size: 950 gallons
Standard for single strength juice is 11.8° Brix, 1.029 solids per gallon.

Calculations:

1. 898.158 ÷ 11.286 = 79.581

2. 8.013 ÷ 1.029 = 7.787

3. 79.581 × 7.787 = 619.697

4. 619.697 ÷ 950 = .652

5. 4.00 oz. ÷ (1 + .29) = 3.10 oz [Volume of product divided by 1 plus overrun equals the volume of the serving size of the mix without the overrun.

6. 3.10 oz. serving × .652 = 2.02 oz.

7. Meets label declaration of 1/4 cup (2 fluid ounces) of single strength juice.

IV. CHECKING THE FINISHED PRODUCT

The finished product must be analyzed and examined for non-quality and quality factors like any nonstandardized product for which a U.S. Standards for Grades is not available.

Attachment No. II indicates the minimum information that should appear on the score sheet.

A. Fluid Measure

The CN labeling program requires that 50 percent juices and juice drink products be labeled in terms of liquid measure. In determining the net volume (or fluid measure), determine the net weight as usual and convert the avoirdupois ounces to fluid ounces by using the following formula:

$$\text{Fluid Ounces} = \frac{\text{Avoirdupois Ounces} \times 0.9614}{\text{Specific Gravity of Product}}$$

If a refractometer is not available or it is inconvenient to determine the specific gravity for CN drinks, a suitable and accurate volumetric cylinder may be used to measure fluid ounces.

The Federal Food and Drug Administration labeling regulations require frozen products that are sold and consumed in a frozen state to declare the volume of the product when the product is at the frozen temperature. Examples of 50 percent juice products impacted by this regulation include a frozen sherbet, yogurt, and a juice (bar, snack, or dessert). To verify total fluid volume declarations for these products an ice water displacement method is used.

Attachment III list the equipment and procedure for determining fluid measure by ice water displacement.

The table in Attachment IV shows the maximum allowable variation (MAV's) allowed per unit to comply with the National Bureau of Weights and Measures. Average net contents of all sample units in a lot shall meet the declared fluid ounces shown on the label.

V. SAMPLES AND RECORDS TO WASHINGTON

Once production has begun, send to the Washington office for review one sample unit (institutional size containers) of each product. If containers consist of individual portion size servings submit eight sample units of each flavor for the respective product. Include a copy of the score sheet that covers the lot evaluated and a copy of the computations that shows compliance with the CN labeling program. Unless requested, it is not necessary to submit a review sample from projected production runs that cover the same flavor(s) for the respective product(s) that were previously submitted.

James R. Rodeheaver

James R. Rodeheaver
Branch Chief

Distribution:A
Agriculture:Washington

FDA REGULATIONS

File Code 147-A-2
July 1994
Attachment I

MINIMUM SINGLE STRENGTH BRIX VALUES FOR CALCULATING THE PERCENTAGE OF JUICE FROM CONCENTRATE

JUICE	100 PERCENT JUICE[1]
Acerola	6.0
Apple	11.5
Apricot	11.7
Banana	22.0
Blackberry	10.0
Blueberry	10.0
Boysenberry	10.0
Cantaloupe melon	9.6
Carambola	7.8
Carrot	8.0
Casaba melon	7.5
Cashew (Caju)	12.0
Celery	3.1
Cherry, dark, sweet	20.0
Cherry, red, sour	14.0
Crabapple	15.4
Cranberry	7.5
Currant (Black)	11.0
Current (Red)	10.5
Date	18.5
Dewberry	10.0
Elderberry	11.0

MINIMUM SINGLE STRENGTH BRIX VALUES FOR CALCULATING THE PERCENTAGE OF JUICE FROM CONCENTRATE

JUICE	100 PERCENT JUICE[1]
Fig	18.2
Gooseberry	8.3
Grape	16.0
Grapefruit	10.0
Guanabana (Soursop)	16.0
Guava	7.7
Honeydew melon	9.6
Kiwi	15.4
Lemon	[2]4.5
Lime	[2]4.5
Loganberry	10.5
Mango	13.0
Nectarine	11.8
Orange	11.8
Papaya	11.5
Passion Fruit	14.0
Peach	10.5
Pear	12.0
Pineapple	12.8
Plum	14.3
Pomegranate	16.0
Prune	18.5

MINIMUM SINGLE STRENGTH BRIX VALUES FOR CALCULATING THE PERCENTAGE OF JUICE FROM CONCENTRATE

JUICE	100 PERCENT JUICE[1]
Quince	13.3
Raspberry (Black)	11.1
Raspberry (Red)	9.2
Rhubarb	5.7
Strawberry	8.0
Tangerine	11.8
Tomato	5.0
Watermelon	7.8
Youngberry	10.0

[1]Indicates Brix value unless other value specified.

[2]Indicates anhydrous citrus acid percent by weight.

U.S. DEPARTMENT OF AGRICULTURE
FOOD SAFETY AND QUALITY SERVICE

SCORE SHEET FOR:

TROPICAL PUNCH JUICE DRINK CONCENTRATE

CONT. NO.	
P.O. NO.	CERT. FORM
REF. NO.	CERT. NO.

NAME AND ADDRESS OF APPLICANT

B. J. Chester, Inc.
Richmond, Virginia

NO., SIZE AND KIND OF CONTAINER 4/125 Fl. oz. Plastic Bottles with screw on caps with Pressure sensitive fiber membrane

LABEL Val Tropical Punch Juice Drink Concentrate Naturally Flavored and Colored. Net Contents 125 Fl. oz. Distributed By Smith's Food, Temple, AZ 76504.

MARK OR IDENTIFICATION	PRIMARY CONTAINERS	31471	31471	31472	31472	31742	31742								
	CASES														
Batch		1	1	1	2	2	2								
Net Contents (fluid ounces)		126.8	125.8	125.5	125.7	127.1	127.4								
CONCENTRATED DRINK:															
Brix Value		58.6	58.6	58.6	58.6	58.6	58.6								
Total Acidity (Citric % By Wt)		1.11	1.11	1.11	1.09	1.09	1.09								
Brix Value Acid Ratio		52.8	52.8	52.8	53.8	53.8	53.8								
Reconstitutes Properly		yes	yes	yes	yes	yes	yes								
FACTORS	SCORE POINTS														
RECONSTITUTED DRINK:															
	COLOR	G	G	G	G	G	G								
	DEFECTS	PF	PF	PF	PF	PF	PF								
	FLAVOR	N	N	N	N	N	N								
XXXXXXXXXXXXXXXX		M	M	M	M	M	M								

CHARGE ON CERTIFICATE	
FEE	
EXPENSES	
TOTAL	

PRINCIPAL REASONS FOR DEGRADING PRODUCT

(N)=Normal, (PF)=Practically Free, (M)=Meets
Meets Food Nutrition Service requirements for a 50% juice drink

OFFICIAL INSPECTOR

DATE

REPLACES FV FORM 384 (1-78) WHICH MAY BE USED.

*LIMITING RULE

File Code 147-A-2
July 1994
Attachment II

ICE WATER DISPLACEMENT (FLUID MEASURE)

EQUIPMENT

1. Scale - either mechanical or digital.

2. Displacement Vessel - physical dimensions large enough to contain the commodity. One design that can be constructed of clear plastic is shown on page iii of this attachment. Its advantages are that the interior baffle reduces wave action when the novelty is inserted into the vessel, and the downward angle of the overflow spout reduces dripping. Other designs may be used.

3. Graduated Cylinder - larger that the labeled volume.

4. Thin wire, clamp, or tongs.

5. Ice water maintained at 33 °F or below.

6. Freezer or ice chest and dry ice to maintain product 0° F or lower.

7. Indelible marker (for products on a stick only).

8. Thermometer.

PROCEDURE

1. Place the sample in the freezer or ice chest until ready to test. Remove packages from the freezer one at a time.

2. Fill the displacement vessel with ice water until the water overflows the spout. Allow to sit until dripping stops. Place the graduated cylinder underneath the spout. Raise the displacement vessel as necessary so that the cylinder fits beneath the spout.

3. Determine and record sample unit gross weight.

4. According to the type of novelty, prepare the product as follows:

   a. Product on a Stick

      Mark on the stick(s) with the indelible marker the point to which the pop will be submerged in the ice water.

   b. Product in a Cup

      Remove the cap from the cup. After the cup and novelty contents have been submerged, the novelty will be removed from the cup to determine the volume of the cup alone.

5. Carefully submerge each novelty until it is completely below the liquid level of the ice water in the displacement vessel.

   a. Product on a Stick

      Use a clamp, tongs, or your fingers to hold the stick(s) and submerge the pop to the level marked in step 4. a.

   b. Product in a Cup

      Skewer the novelty with the thin wire or form a loop on the end of the wire to push the cup completely below the liquid level.

6. Subtract the volume of the stick(s) or cup from the total water volume of the novelty.

   a. Product on a Stick

      Melt the ice pop off the stick or sticks. Submerge the stick or sticks to the line marked in step 4. a. Record the volume of water displaced. This is the volume of the stick.

   b. Product in a Cup

      Remove the novelty from the cup. Rinse the cup, then carefully submerge it. (Making small pinholes in the base of the cup makes submersion easier). Record the volume of water displaced into the graduated cylinder. This is the volume of the cup.

Displacement Vessel for CN Novelty Products

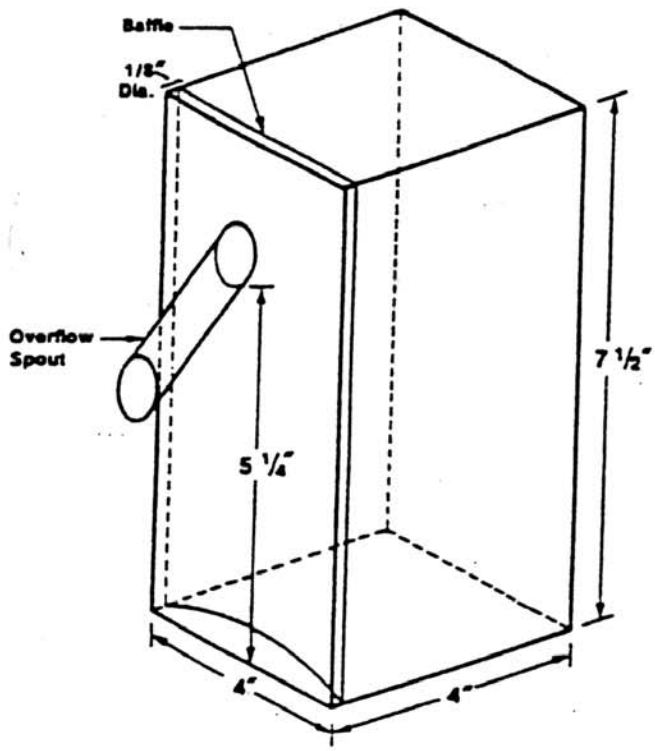

This displacement vessel can be constructed or obtained from Custom Design Products, 6527 Dickens Place, Richmond, VA 23230. (The use of firm names does not imply that they are endorsed or recommended by the Department of Agriculture over similar products commercially available from other manufacturers).

Maximum Allowable Variation (MAV's) for an individual package labeled by volume.

Labeled quantity	Liquid MAV (fl oz)
0.75 to 2.25 fl oz	0.13
2.26 to 4.25 fl oz	0.19
4.26 to 5.75 fl oz	0.25
5.76 to 7.50 fl oz	0.31